Bracket - RH HOC Rear Roller

R100-7105

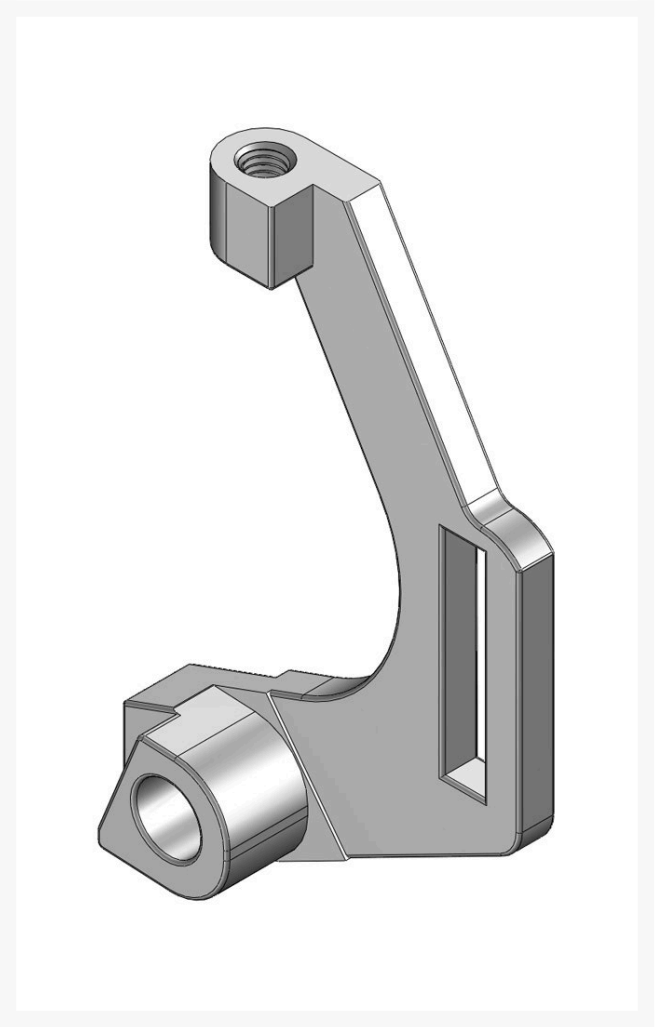

Replaces

R&R Products	R100-7105-01
Toro	100-7105, 100-7105-01

Specifications

Manufacturer	R&R Products

Fits Models

Toro Reelmaster 5200D
Toro Reelmaster 5400D

Baber Turf Equipment Co.
Unit 6 / 10 Firth Street Auckland, 2113
09 294 6040
https://baber.rrproducts.com/